ΜΙΑ ΑΝΑΦΟΡΑ ΣΤΗΝ ΙΣΤΟΡΙΑ

Ο ΠΡΩΤΟΣ ΕΜΠΟΡΙΚΑ ΔΙΑΘΕΣΙΜΟΣ ΕΠΕΞΕΡΓΑΣΤΗΣ *INTEL 4004*

1971

Μ.Ι.Σ. 2021-2022

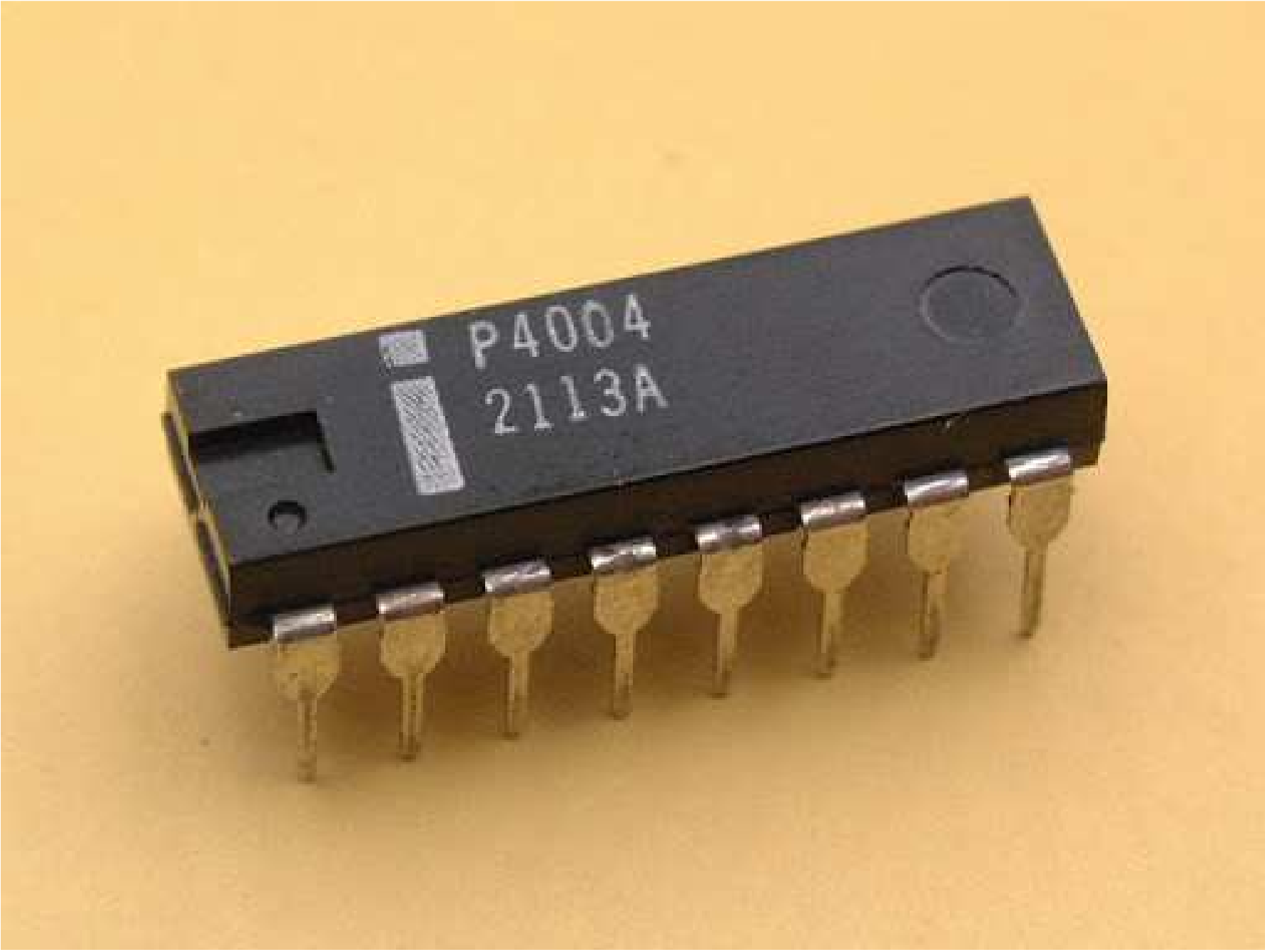
P4004
2113A

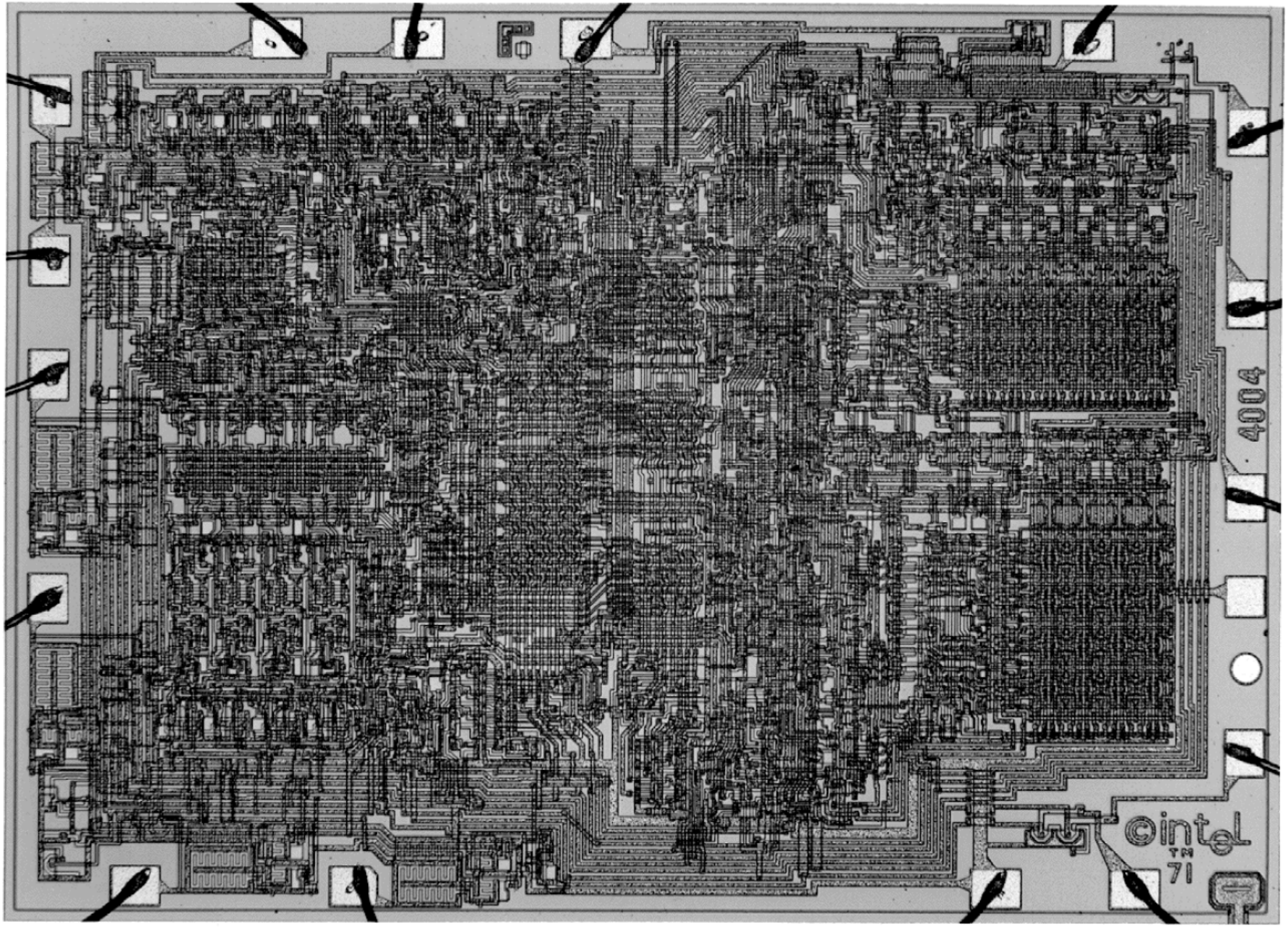
4004
©intel
TM
71

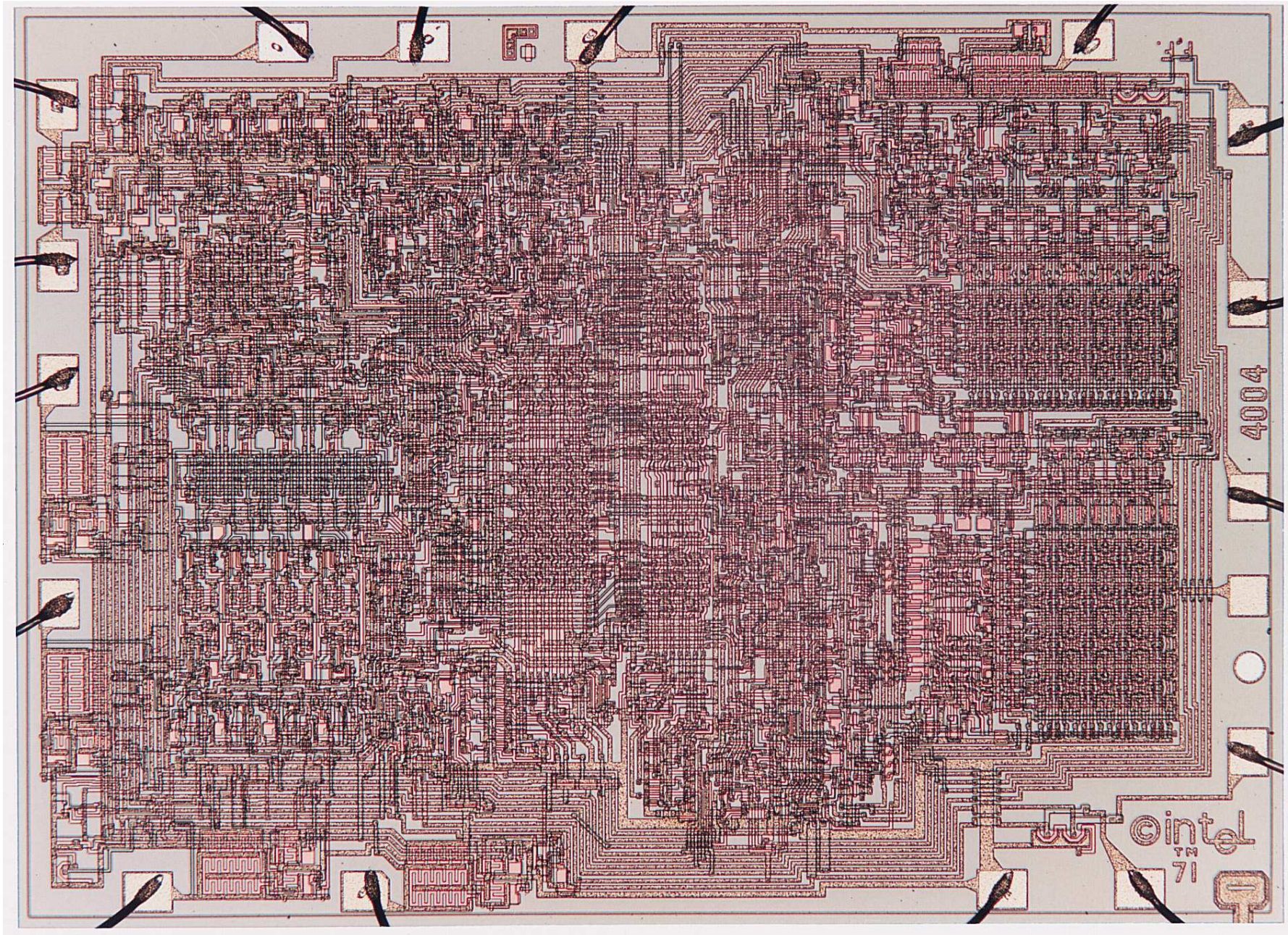
4004
©intel
TM
71

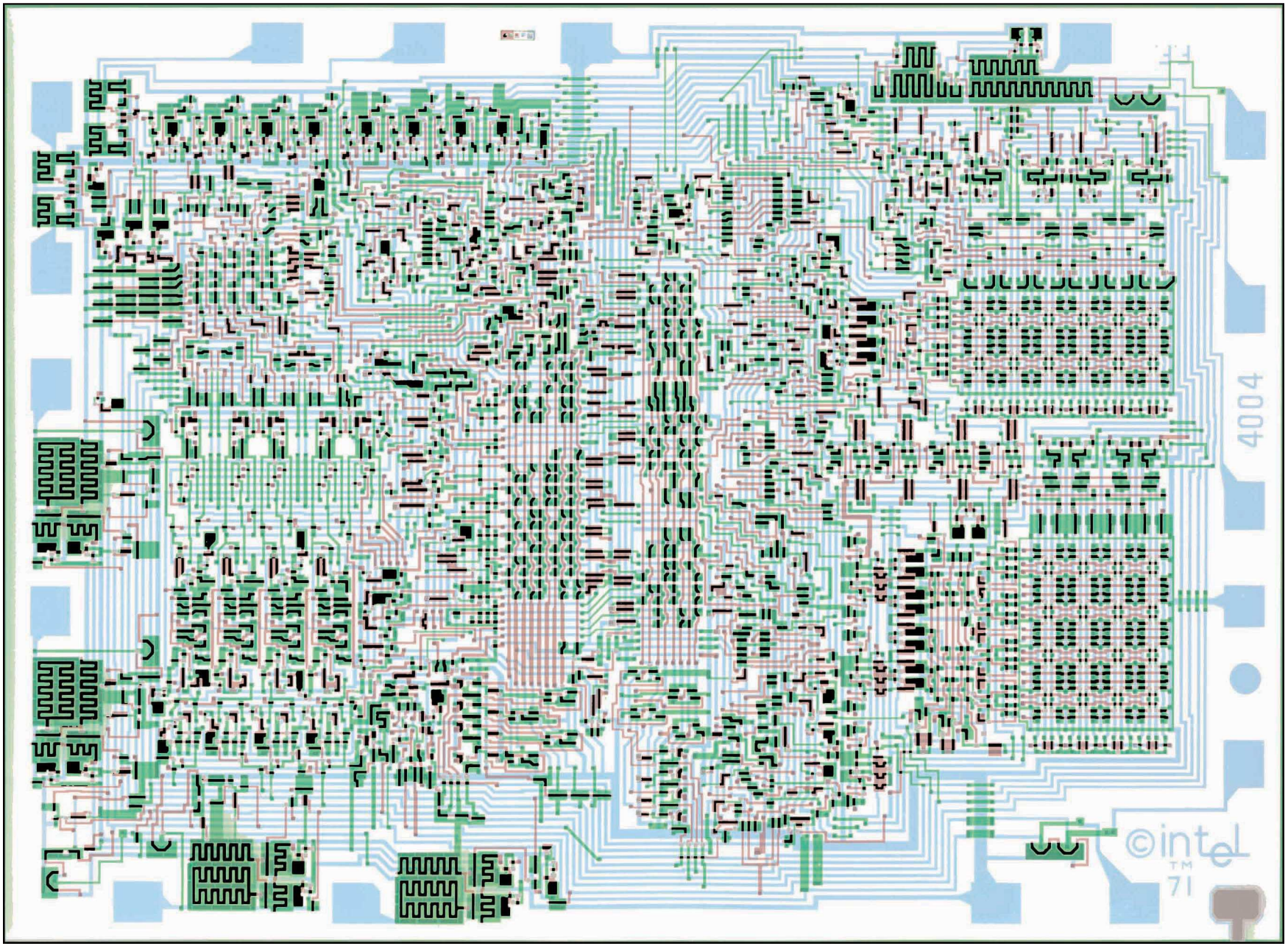
4004
©intel
TM
71

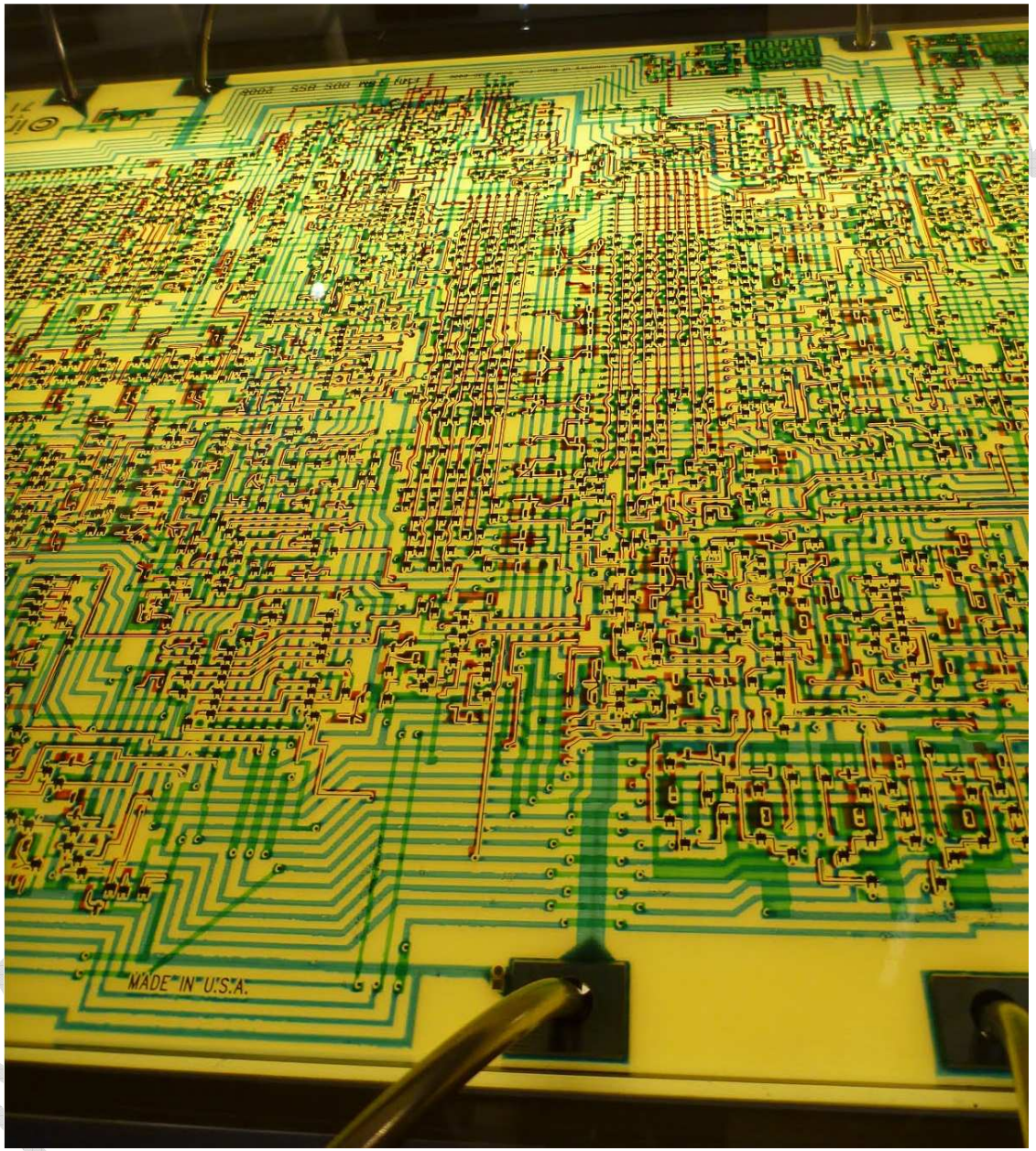
MADE IN U.S.A.

UniCom 141P
Pelikan

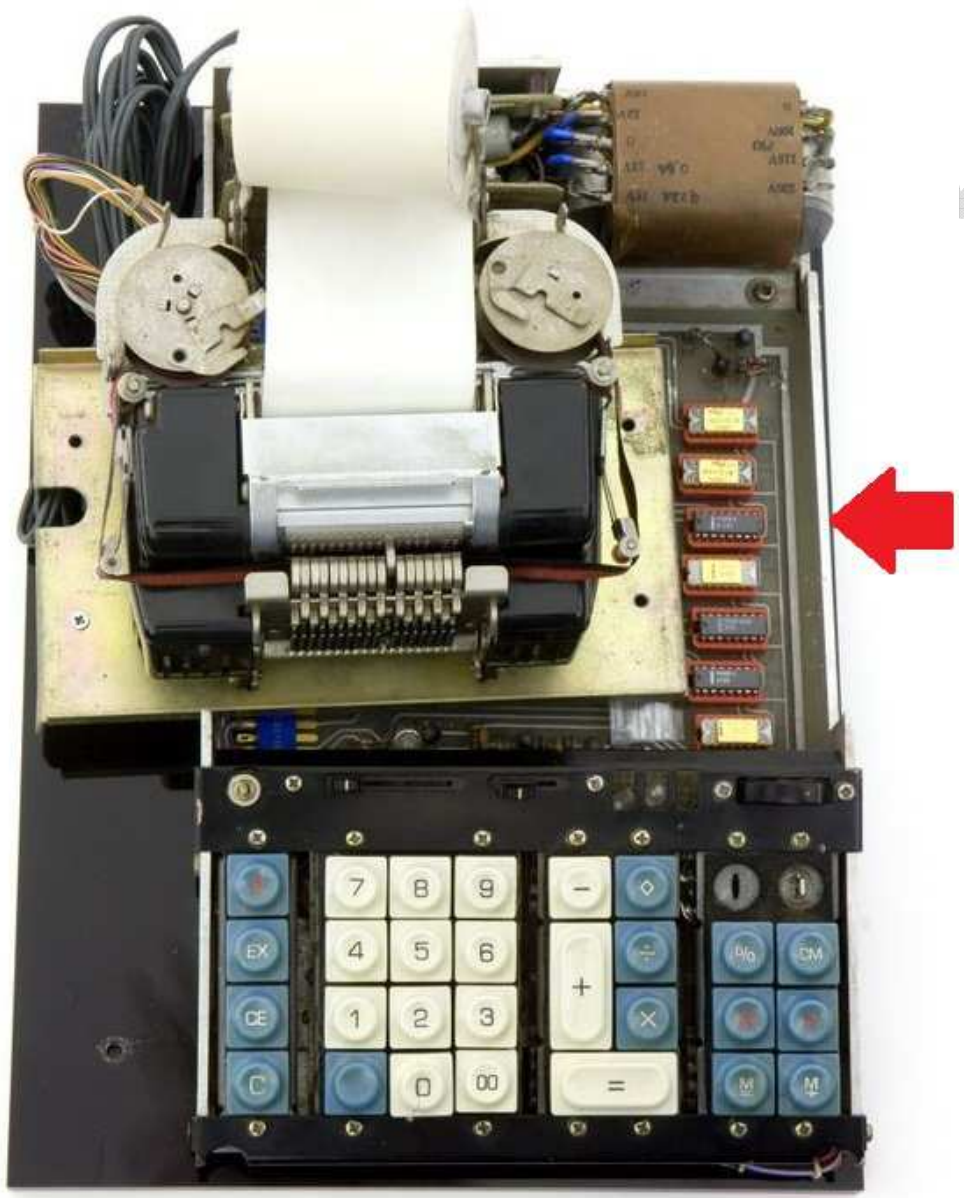
7
8
9
4
5
6
1
2
3
0
00
=
EX
CE
C
M

4004 SINGLE CHIP 4-BIT P-CHANNEL MICROPROCESSOR

- **4-Bit Parallel CPU With 46 Instructions**
- **Instruction Set Includes Conditional Branching, Jump to Subroutine and Indirect Fetching**
- **Binary and Decimal Arithmetic Modes**
- **CPU Directly Compatible With MCS-40 ROMs and RAMs**
- **Easy Expansion—One CPU can Directly Drive up to 32,768 Bits of ROM and up to 5120 Bits of RAM**
- **10.8 Microsecond Instruction Cycle**

The Intel® 4004 is a complete 4-bit parallel central processing unit (CPU). The 4004 easily interfaces with keyboards, switches, displays, A-D converters, printers and other peripheral equipment.

The CPU can directly address 4K 8-bit instruction words of program memory and 5120 bits of data storage RAM. Sixteen index registers are provided for temporary data storage. Up to 16 4-bit input ports and 16 4-bit output ports may also be directly addressed.

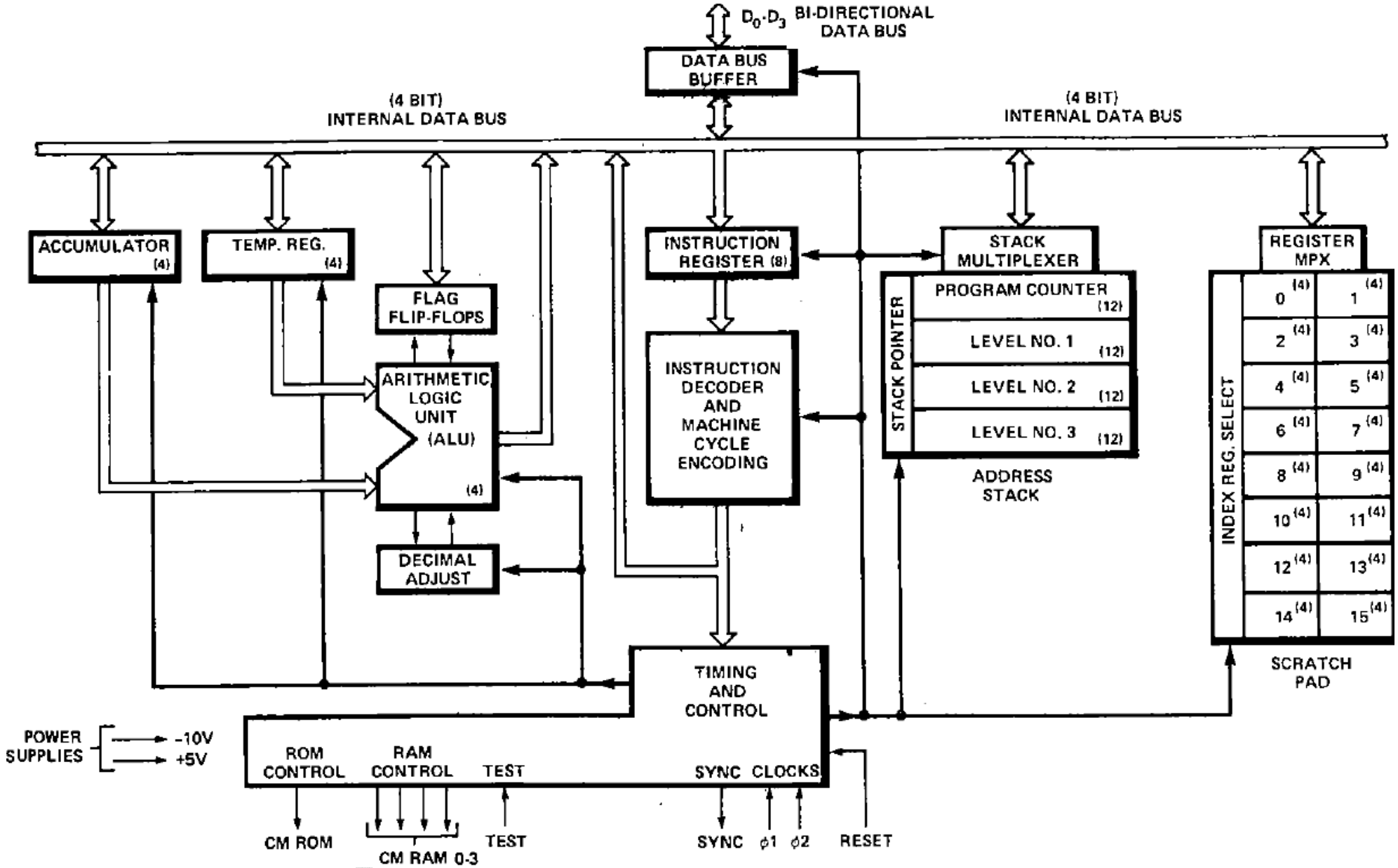
D0-D3 BI-DIRECTIONAL DATA BUS
DATA BUS BUFFER
(4 BIT) INTERNAL DATA BUS
(4 BIT) INTERNAL DATA BUS
ACCUMULATOR (4)
TEMP. REG. (4)
FLAG FLIP-FLOPS
ARITHMETIC LOGIC UNIT (ALU) (4)
DECIMAL ADJUST
INSTRUCTION REGISTER (8)
INSTRUCTION DECODER AND MACHINE CYCLE ENCODING
STACK MULTIPLEXER
STACK POINTER
PROGRAM COUNTER (12)
LEVEL NO. 1 (12)
LEVEL NO. 2 (12)
LEVEL NO. 3 (12)
ADDRESS STACK
REGISTER MPX
INDEX REG. SELECT
0 (4) 1 (4)
2 (4) 3 (4)
4 (4) 5 (4)
6 (4) 7 (4)
8 (4) 9 (4)
10 (4) 11 (4)
12 (4) 13 (4)
14 (4) 15 (4)
SCRATCH PAD
TIMING AND CONTROL
POWER SUPPLIES
-10V
+5V
ROM CONTROL
RAM CONTROL
TEST
SYNC CLOCKS
CM ROM
CM RAM 0-3
TEST
SYNC
ϕ1
ϕ2
RESET

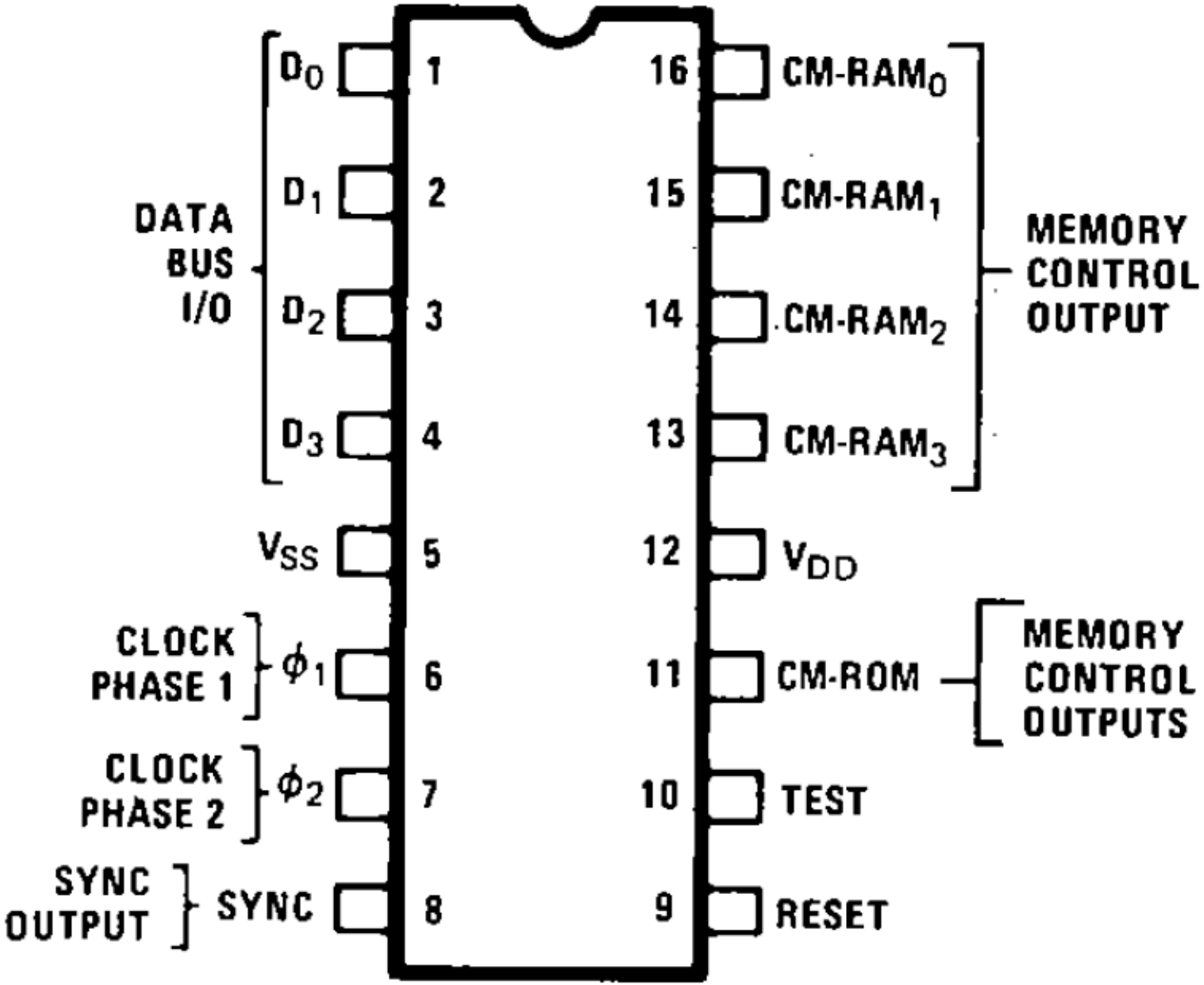
DATA BUS I/O
D0
D1
D2
D3
VSS
CLOCK PHASE 1
φ1
CLOCK PHASE 2
φ2
SYNC OUTPUT
SYNC
1
2
3
4
5
6
7
8
16
15
14
13
12
11
10
9
CM-RAM0
CM-RAM1
CM-RAM2
CM-RAM3
MEMORY CONTROL OUTPUT
VDD
CM-ROM
MEMORY CONTROL OUTPUTS
TEST
RESET

D_0-D_3

BIDIRECTIONAL DATA BUS. All address and data communication between the processor and the RAM and ROM chips occurs on these 4 lines.

Most positive voltage. **V_{SS}**

ϕ_1, ϕ_2

Two phase clock inputs.

SYNC output. Synchronization signal generated by the processor and set to the ROM and RAM chips. It indicates the beginning of an instruction cycle.

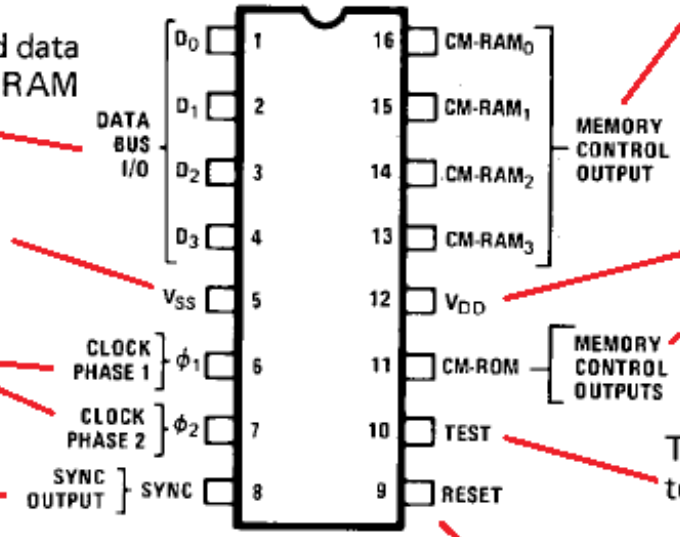

CM-RAM_0 – CM-RAM_3

CM-RAM outputs. These are the bank selection signals for the 4002 RAM chips in the system.

V_{DD}

V_{SS} -15 ±5% main supply voltage.

CM-ROM output. This is the ROM selection signal sent out by the processor when data is required from program memory.

TEST input. The logical state of this signal may be tested with the JCN instruction.

RESET input. A logic "1" level at this input clears all flags and status registers and forces the program counter to zero. To completely clear all address and index registers, RESET must be applied for 64 clock cycles (8 machine cycles).